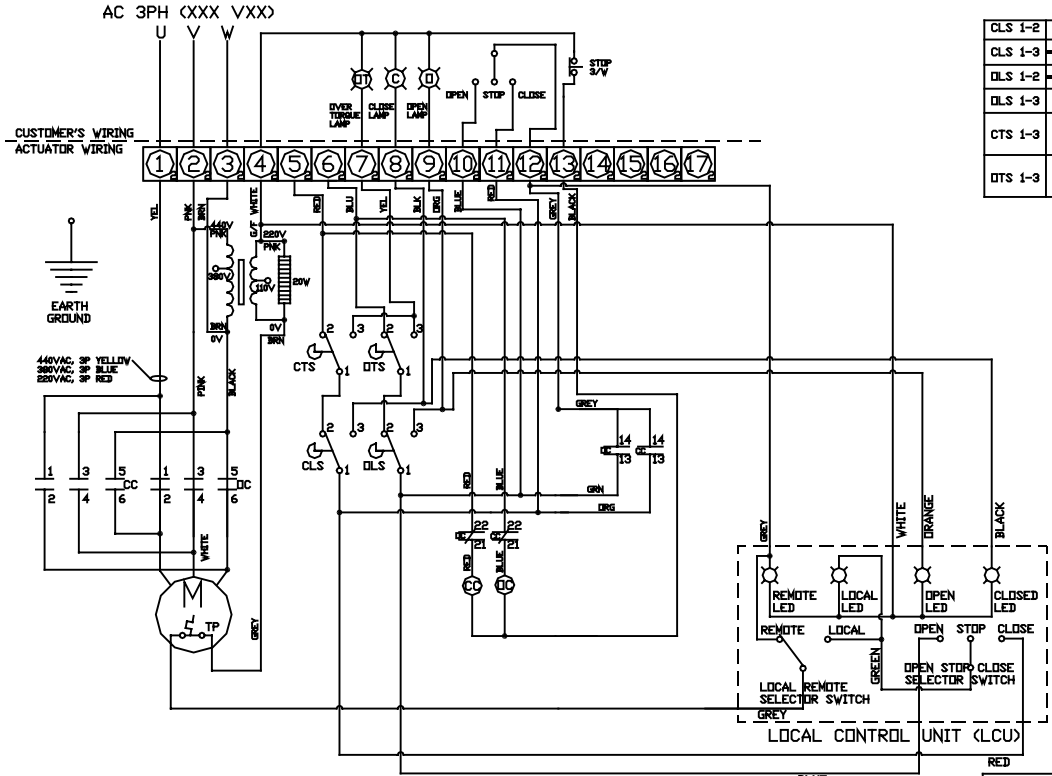

	CLOSE	OPEN
CLS 1-2		
CLS 1-3		
OLS 1-2		
OLS 1-3		
CTS 1-3	CLOSING TORQUE SWITCH INTERRUPTS CONTROL IF MECHANICAL OVERLOAD OCCURS DURING CLOSING CYCLE	
OTS 1-3	OPENING TORQUE SWITCH INTERRUPTS CONTROL IF MECHANICAL OVERLOAD OCCURS DURING OPENING CYCLE	

CLS: CLOSE LIMIT SWITCH (250VAC 6A)

OLS: OPEN LIMIT SWITCH (250VAC 6A)

CTS: CLOSE TORQUE SWITCH (250VAC 6A)

OTS: OPEN TORQUE SWITCH (250 VAC 6A)

TP: THERMAL PROTECTOR (250VAC 6A)

CC: CLOSE MAGNETIC COIL

OC: OPEN MAGNETIC COIL

** EACH ACTUATOR SHOULD BE POWERED THROUGH ITS OWN INDIVIDUAL SWITCH OR RELAY CONTACTS TO PREVENT CROSS-FEED BETWEEN TWO (2) OR MORE ACTUATORS

REFERENCED FROM DWG. NS-44700-A

ABZ 15 THRU 250 (3 PHASE) WIRING DIAGRAM W/ IMS AND LCU

SCALE	APPROVED BY:	DRAWN BY EC
DATE 10/7/98		REVISED 6/21/00

ABZ VALVE & CONTROLS

113 W. MAIN, MADISON, KS 66860

DRAWING NUMBER DRS15133 REV A